MICROCARE
Techniques Pvt. Ltd.

MODEL : MV 5 - 1 MF IMPELLER

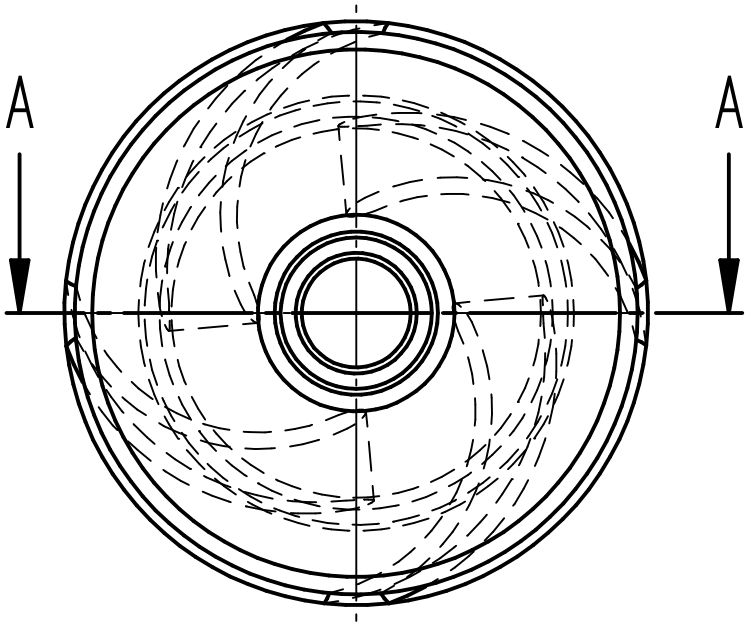

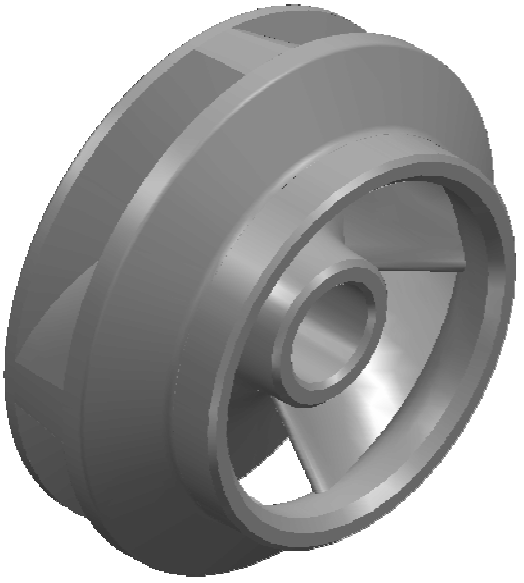

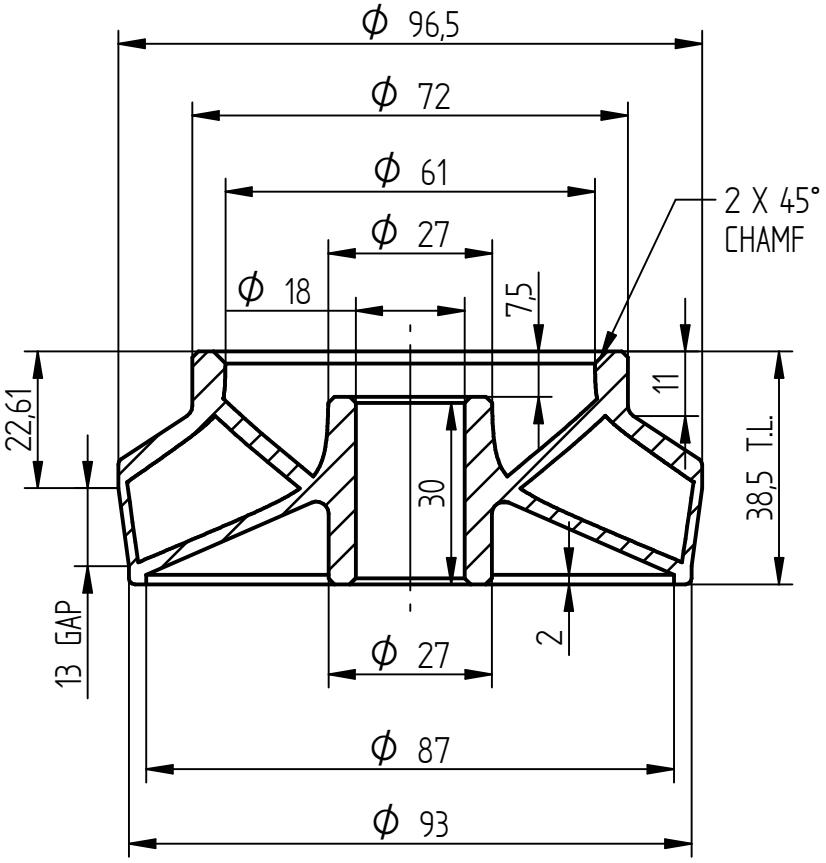

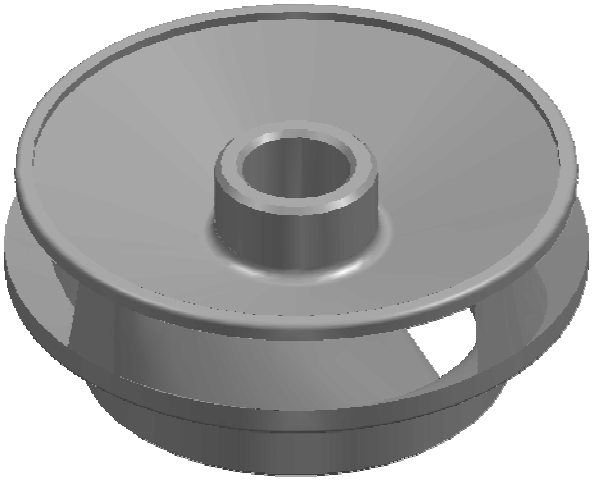

SECTION A–A

NOTE : ALL DIMENSIONS ARE IN mm.
DO NOT SCALE, IF ANY DOUBT PLEASE ASK.
ALL DIMENSIONS ARE AS CAST

Material : S.S. 410	Head Duty Point/ Shut off : 7/11 Mtrs.	**M V 5.1 IMPELLER**
Weight : 0.500 kg	Power : 1.25 H.P.	
Borewell : 6"	Flow : 400 L.P.M.	**MIX FLOW - ASCAST**
Scale : N.T.S.	Nos. of Blades : 6 ACW	
Date : 09.06.2012	Motor R.P.M. : 2880 @ 50 Hz	**INVESTMENT CASTING**