MODEL: M 323 - 107 IMPELLER

MICROCARE
Techniques Pvt. Ltd.

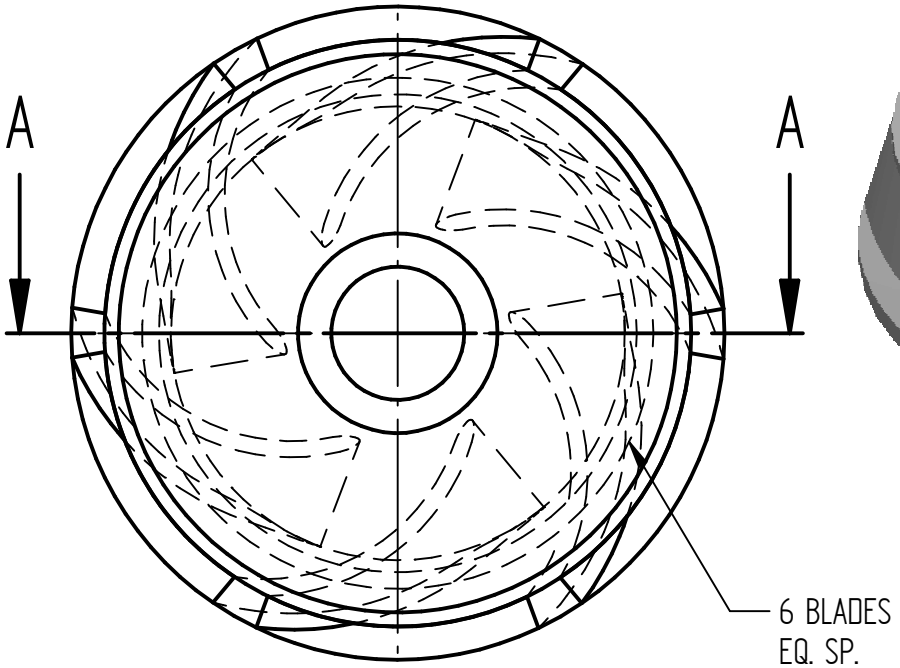

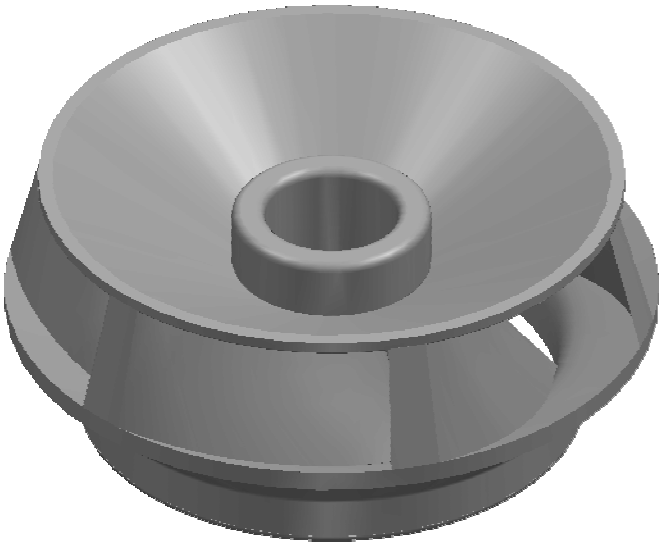

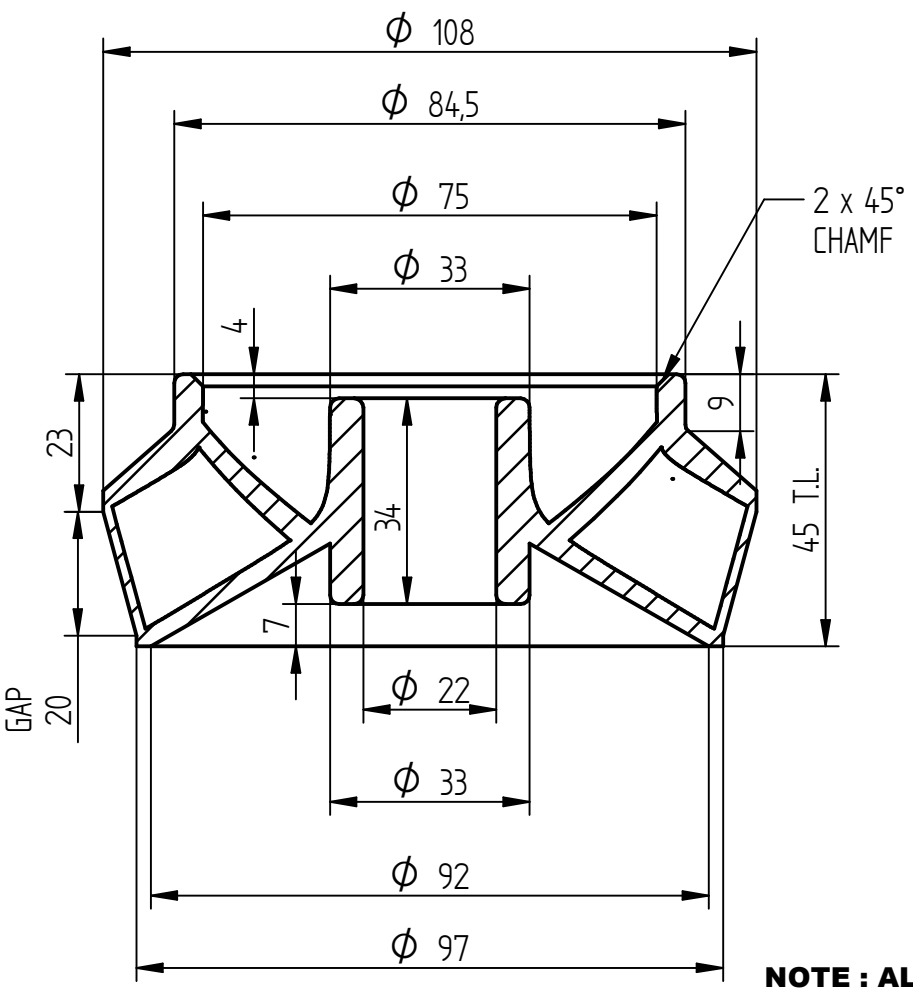

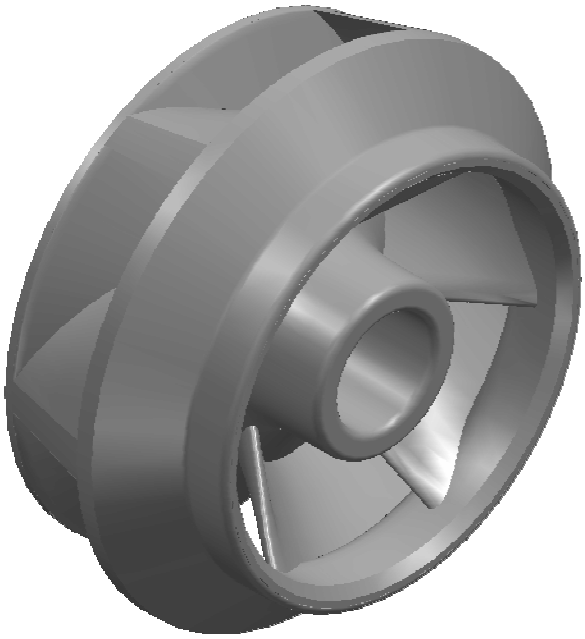

SECTION A–A

NOTE : ALL DIMENSIONS ARE IN mm.
DO NOT SCALE, IF ANY DOUBT PLEASE ASK.
ALL DIMENSIONS ARE AS CAST

Material : S.S. 410	Head Duty Point / Shut Off : 9/13 Mtrs.	**M 323 - 107 IMPELLER**
Weight : 0.700 kg	Power : 2.5 H.P.	
Borewell : 6"	Flow : 1000 L.P.M.	**MIX FLOW - AS CAST**
Scale : N.T.S.	Nos. of Blades : 6 ACW	
Date : 15.05.2012	Motor R.P.M. : 2880 @ 50 Hz	**INVESTMENT CASTING**