MODEL : M 393 MF IMPELLER

MICROCARE
Techniques Pvt. Ltd.

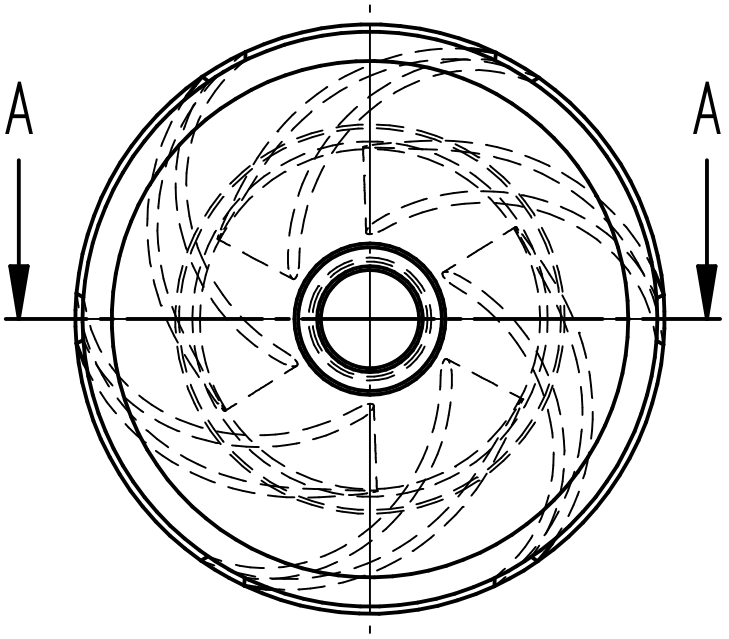

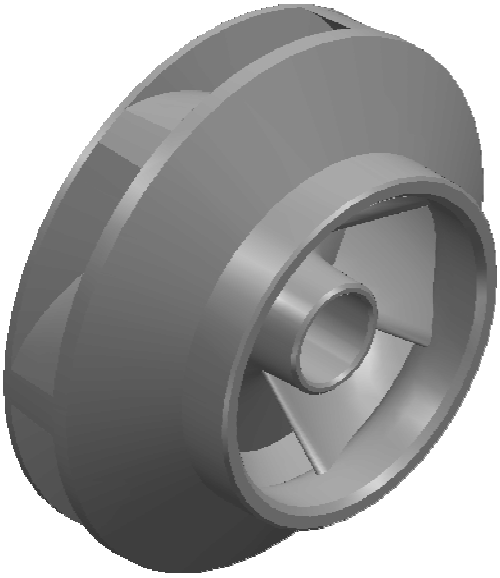

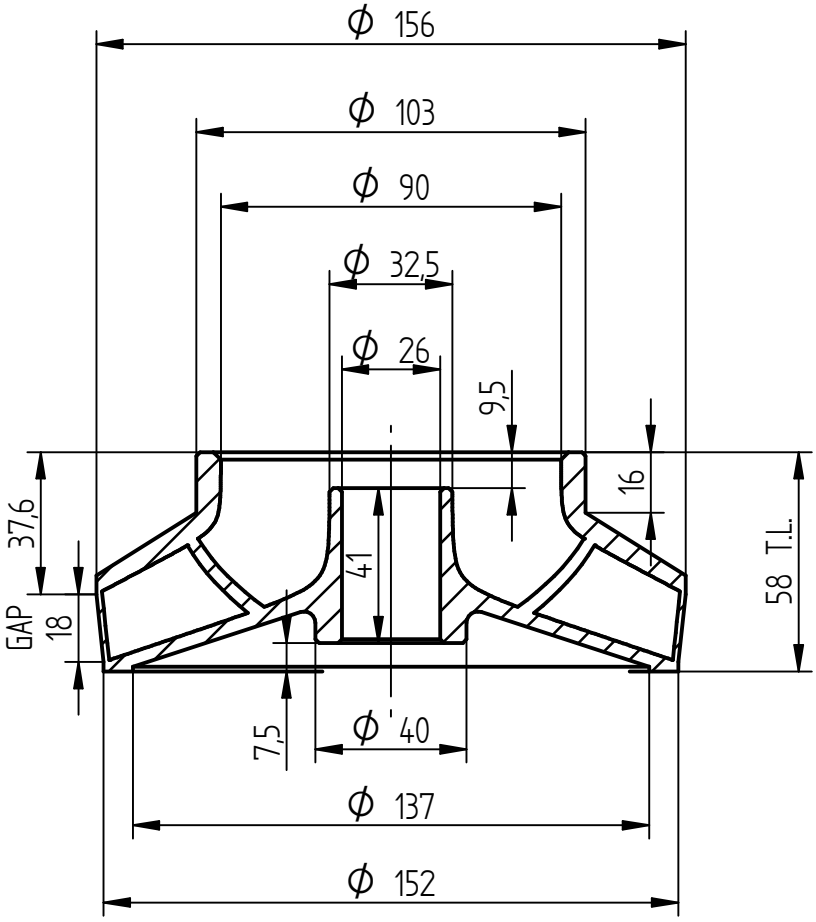

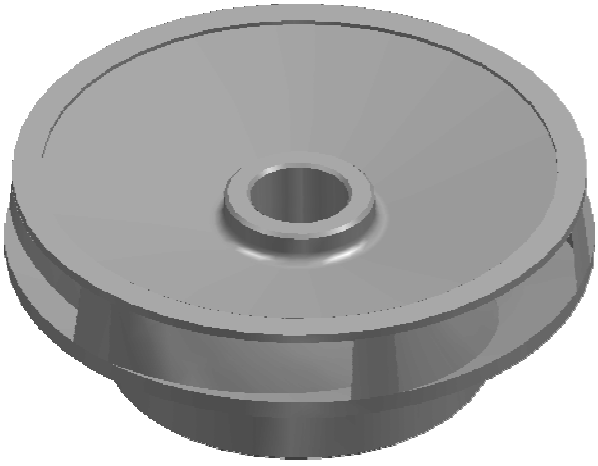

NOTE : ALL DIMENSIONS ARE IN mm.
DO NOT SCALE, IF ANY DOUBT PLEASE ASK.
ALL DIMENSIONS ARE AS CAST

SECTION A–A

Material : S.S. 410	Head duty point / shut off : 7 / 11 Mtrs.	**M 393 IMPELLER**
Weight : 1.800 kg	Power : 15 H.P. .	
Borewell : 8"	Flow : 2500 L.P.M.	**MIX FLOW - AS CAST**
Scale : N.T.S.	Nos. of Blades : 6 ACW	
Date : 15.05.2012	Motor R.P.M. : 2880 @ 50 Hz	**INVESTMENT CASTING**